Statics Final Project

Gabriel Moody, Tyler Jackson, Caleb Karlson, David Williams

But first...

What is a FOLDING STEP STOOL

What Else?

- Identify a target user and typical use scenarios
- Weight capacity, safety factor, height, footprint, folded thickness, and portability
- FBDs for at least two cases
- safety factor of at least 3×

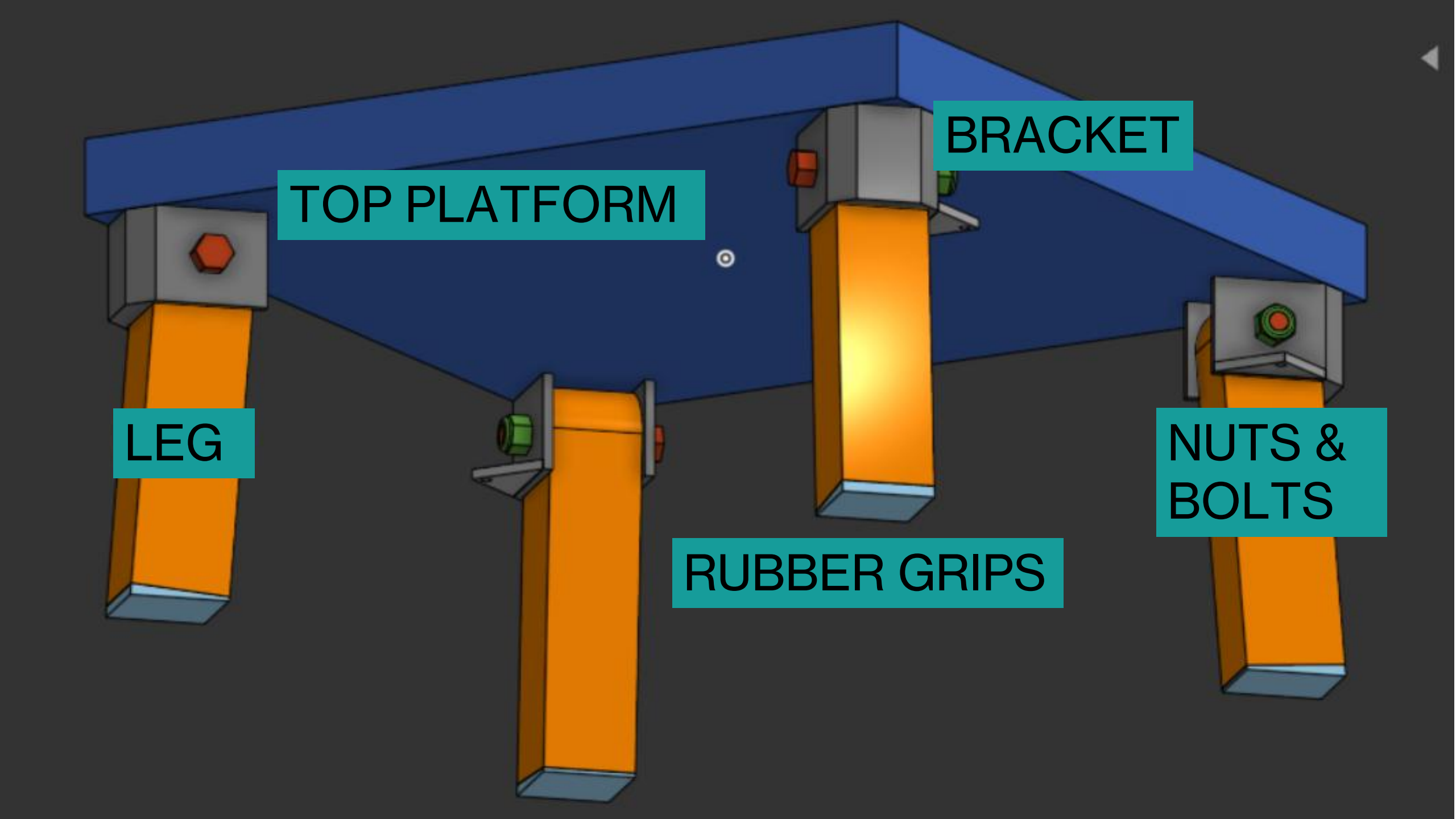
BRACKET
TOP PLATFORM
LEG
NUTS &
BOLTS
RUBBER GRIPS

Dimensions

- Platform size: **23 in × 23 in**
- Height: **12.17 in**
- Footprint: **23.465 in × 23.465 in**
- Leg cross section: **2.5 in × 2.328 in**
- Bolt diameter: **0.5 in**
- Top platform volume: **1058 in^3**
- One leg volume: **~56.2 in^3**
- One bracket volume: **~7.8 in^3**
- <u>Thickness when folded: **4.5 in or 114.3 mm**</u>

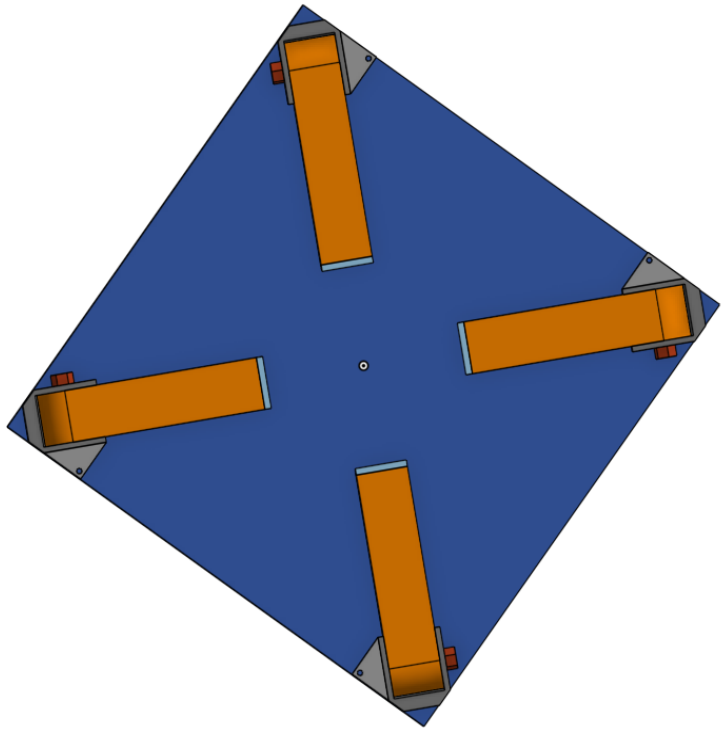

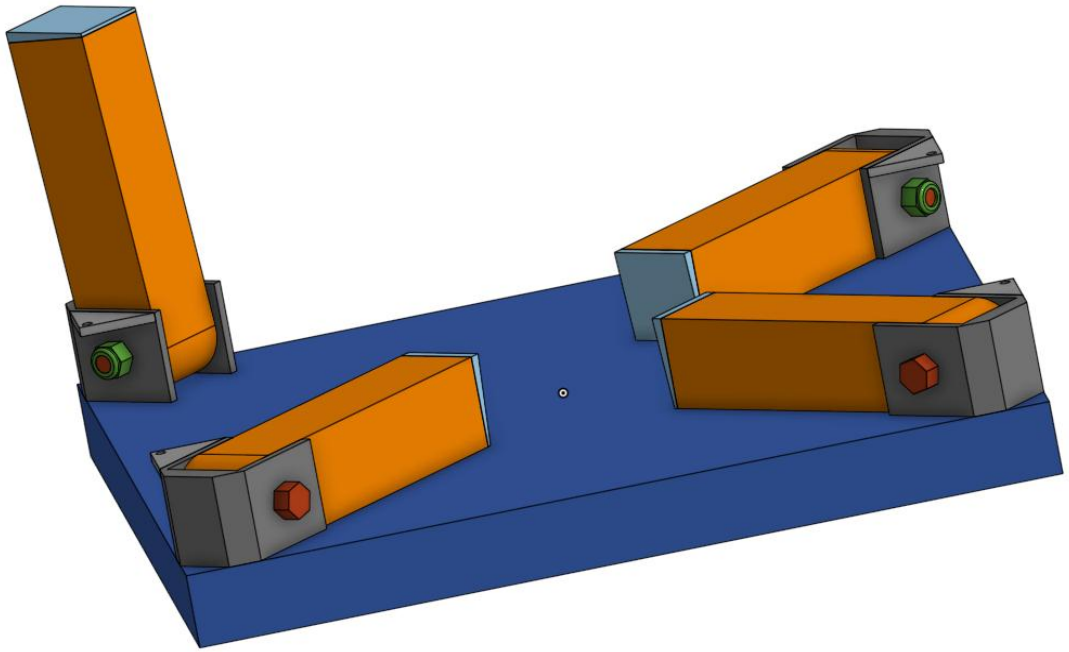

ASSUMPTIONS

- Static loading (no jumping)
- Rigid top platform
- Flat, rigid floor
- All feet in contact
- Legs connected with ideal pin joints (no moment transfer)
- The connections are pin/hinge connections and therefore hold no bending moment force.

Free Body Diagram – Center Load

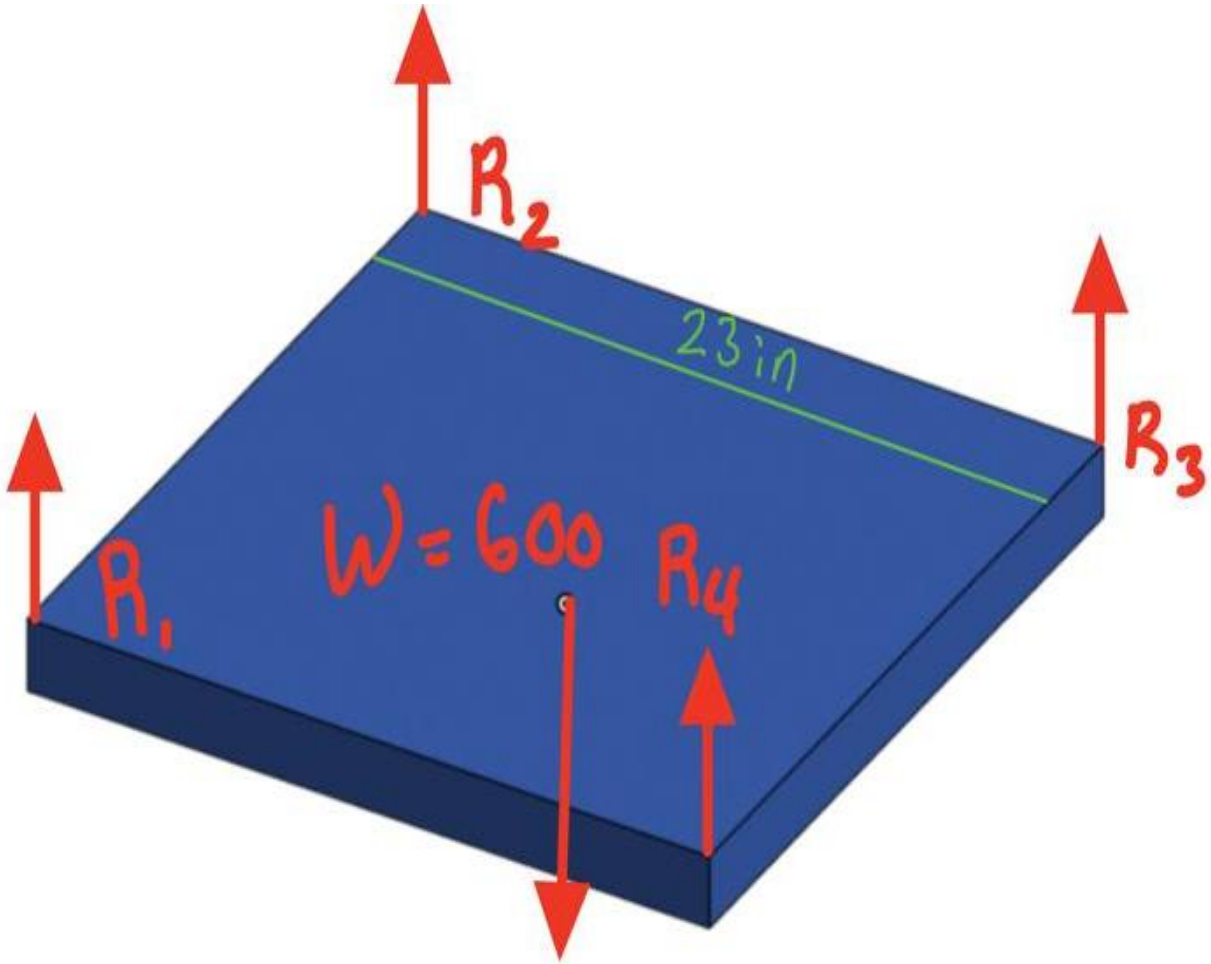

$$\sum F_y = 0 = R_1 + R_2 + R_3 + R_4 - W$$

$$\sum M_x = 0$$

$$\sum M_y = 0$$

$$R_1 = R_2 = R_3 = R_4 = \frac{W}{4}$$

$$R_{1,2,3,4} = \frac{600\text{lbs}}{4 \cdot \cos(4.4)}$$

$$\boxed{R_{1,2,3,4} \approx 154.5\text{lbs} \uparrow}$$

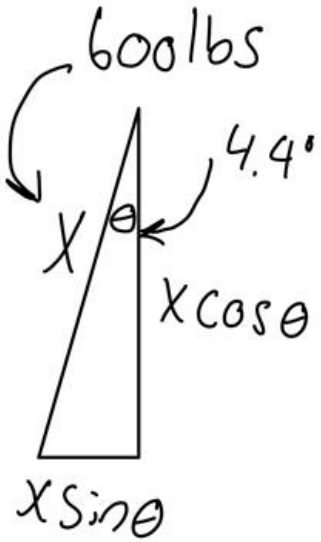

Note: Sum of forces in the x direction is **zero** due to symmetry.

WORST CASE... WILL IT TIP?

<u>More Assumptions</u>

- User is standing on exact edge in the middle of one of the sides of the stool
- User is standing completely normal to the top platform
- Assume the two far legs have zero reaction in event of tipping

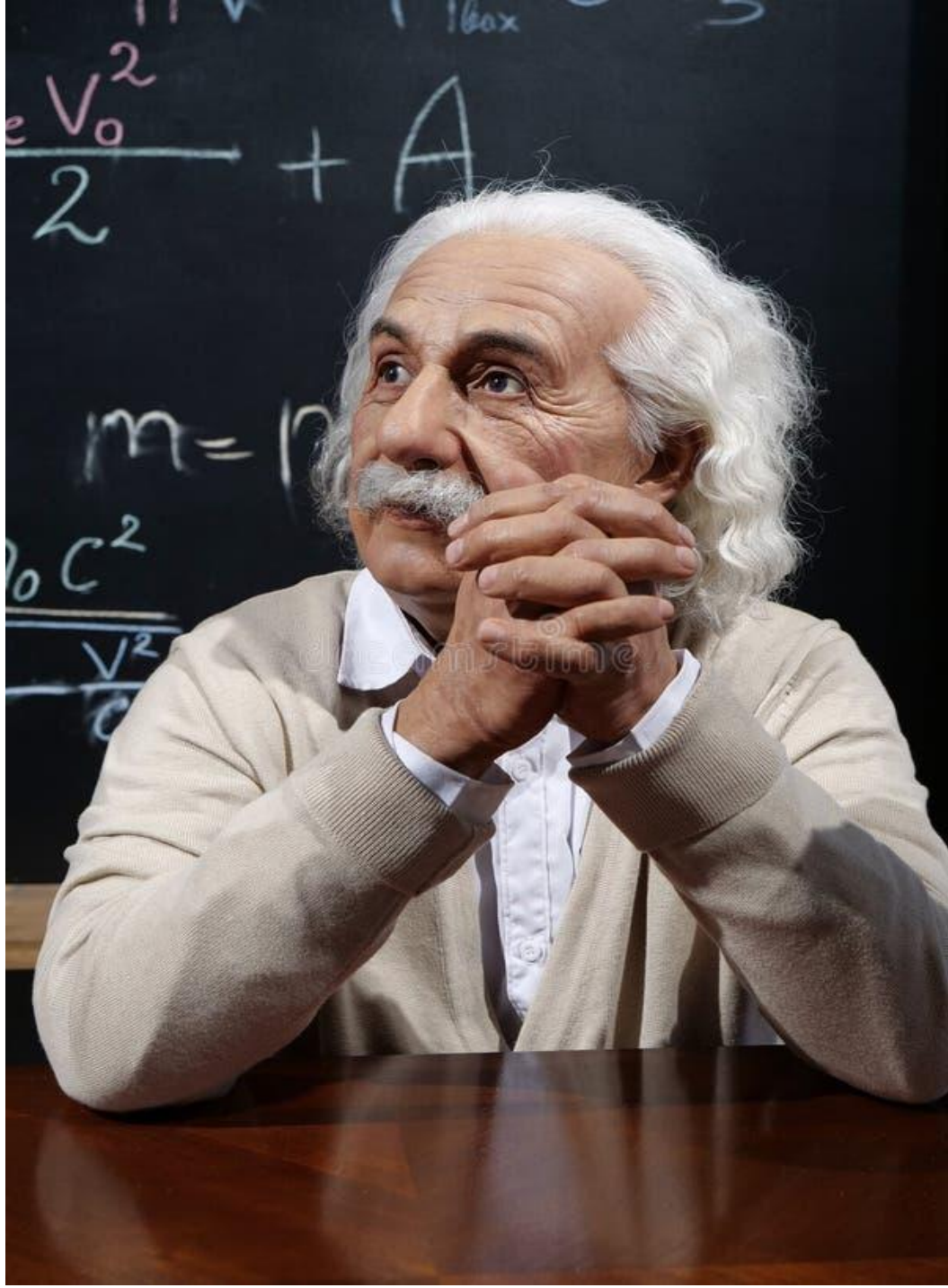

SO.... WILL IT TIP?

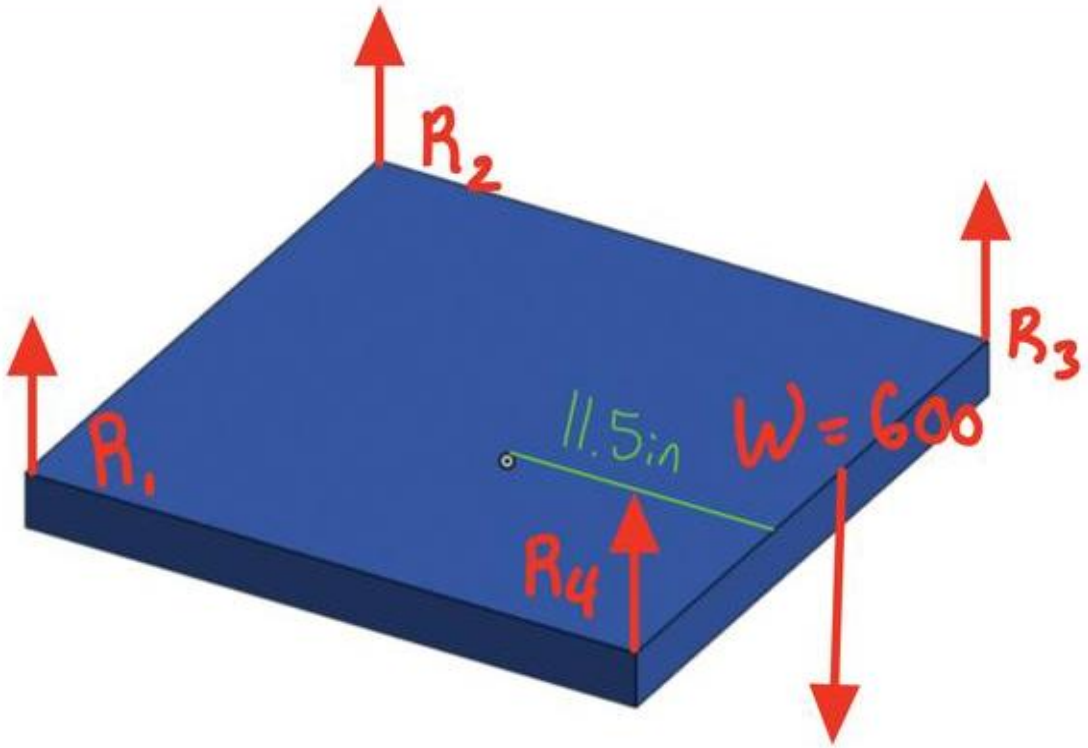

Let "x" be

Distance to tipping boundry = (MaxFootprint) / 2 = 11.7325in

Let "B" be

Actual Loading Distance = 11.5in

So if B < x... NO TIPPING!

$$S_{Tip} = \frac{\text{Distance to tipping boundry}}{\text{Actual loading distance}} = \frac{11.7325\text{in}}{11.5\text{in}} = 1.02$$

A Few More Things to Work Out

1) What's the best material(s) for the top platform, legs, and brackets?
2) How can we optimize the weight of each leg and top platform while maintaining structural integrity?

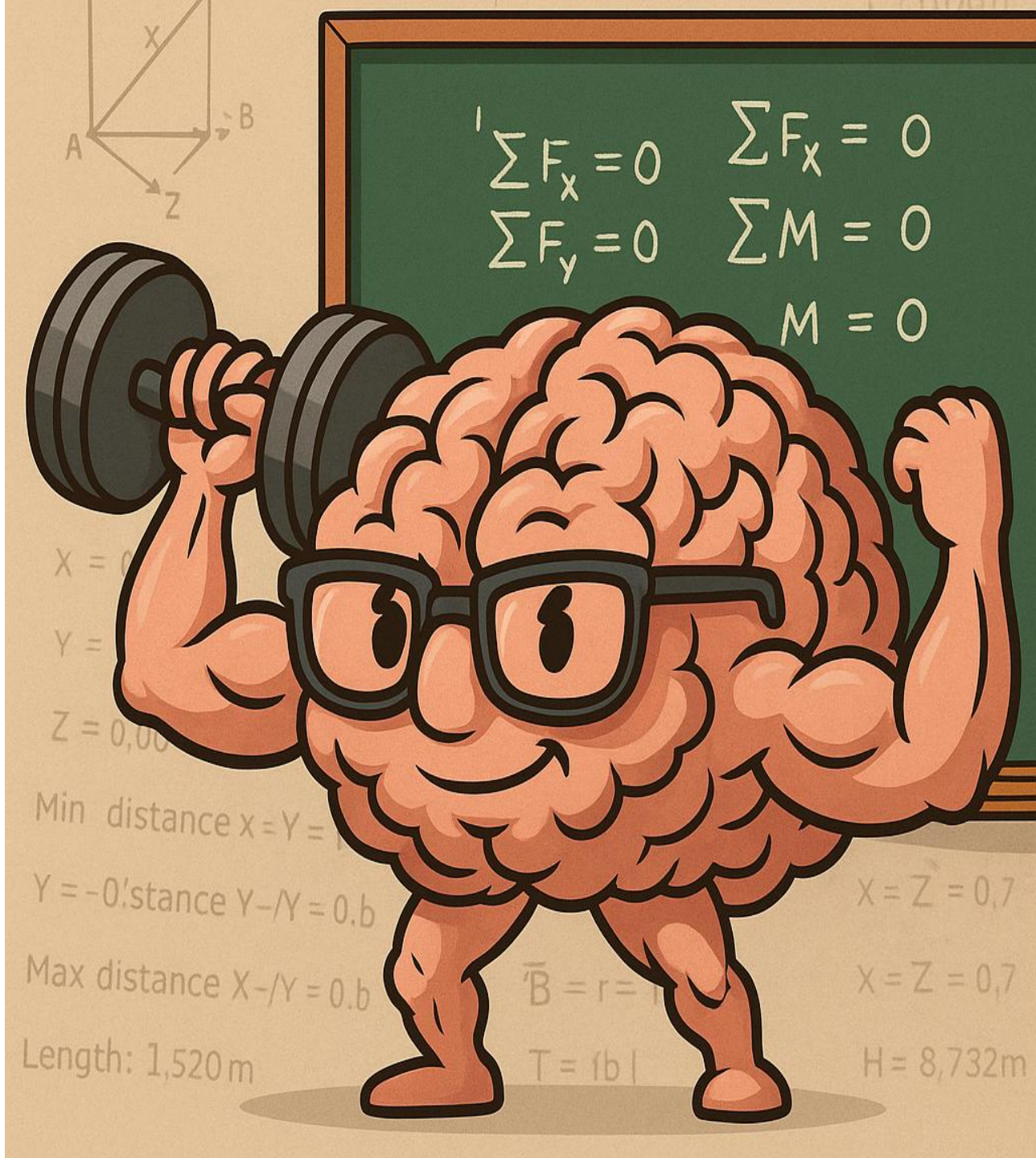

Problem #1: Chose The Right Materials

Solution:

- Top platform: 6061-T6 aluminum rectangular prism
  - Reason: High stiffness for its weight, so it stays rigid under a person's load without being heavy.
- Legs: 6061-T6 aluminum rectangular tube
  - Reason: Great strength to weight in compression, and a hollow tube keeps them light while still resisting buckling.
- Brackets: A36 steel plate (0.25 in)
  - Reason: Steel handles bearing and wear at the 0.5 in bolt hole much better than aluminum, so the hinge region will not ovalize or loosen.

Aluminum 6061-T6; 6061-T651

Physical Properties	Metric	English
Density	2.7 g/cc	0.0975 lb/in³
Mechanical Properties		
Hardness, Brinell	95	95
Hardness, Knoop	120	120
Hardness, Rockwell A	40	40
Hardness, Rockwell B	60	60
Hardness, Vickers	107	107
Ultimate Tensile Strength	310 MPa	45000 psi
Tensile Yield Strength	276 MPa	40000 psi
Elongation at Break	12 %	12 %
Elongation at Break	17 %	17 %
Modulus of Elasticity	68.9 GPa	10000 ksi
Notched Tensile Strength	324 MPa	47000 psi
Ultimate Bearing Strength	607 MPa	88000 psi
Bearing Yield Strength	386 MPa	56000 psi
Poisson's Ratio	0.33	0.33
Fatigue Strength	96.5 MPa	14000 psi
Fracture Toughness	29 MPa-m½	26.4 ksi-in½
Machinability	50 %	50 %
Shear Modulus	26 GPa	3770 ksi

ASTM A36 Mild/Low Carbon Steel

Physical Properties

Physical Properties	Imperial
Density	0.284 lb/in^3

Mechanical Properties

Mechanical Properties	Imperial
Tensile Strength, Ultimate	58000 - 79800 psi
Tensile Strength, Yield	36300 psi
Elongation at Break (in 200 mm)	20.0 %
Elongation at Break (in 50 mm)	23.0 %
Modulus of Elasticity	29000 ksi
Bulk Modulus (typical for steel)	20300 ksi
Poissons Ratio	0.260
Shear Modulus	11500 ksi

Problem #2: Optimize for a realistic weight.

Solution: Using a filling of 30% the total volume came to be our best solution for weight.

For Reference:

Weight if 30% filled: 224.767912(0.0975) = **21.91lb**

Weight if top platform is fully filled: 1058(0.0975) =**103.16lb**

Physical Properties	Metric	English
Density	2.7 g/cc	0.0975 lb/in³
Mechanical Properties		
Hardness, Brinell	95	95
Hardness, Knoop	120	120
Hardness, Rockwell A	40	40
Hardness, Rockwell B	60	60
Hardness, Vickers	107	107
Ultimate Tensile Strength	310 MPa	45000 psi
Tensile Yield Strength	276 MPa	40000 psi
Elongation at Break	12 %	12 %

$200\,lb$, $SF = 3$, $3 \cdot 200\,lb = 600\,lb \downarrow$

$R_{3,4} = 300\,lb \downarrow$

Top Platform

$A_{Top} = (23\,in)^2 = 529\,in^2$

$\sigma_{TP} = \frac{W}{A_{Top}} = \frac{600\,lb}{529\,in^2} = 1.13\,psi$

6061 Yeild Strength = 40,000 psi

$SF_{TP} = \frac{\sigma_{AL}}{\sigma_{TP}} = \frac{(\frac{3}{10})40{,}000\,psi}{1.13\,psi} \approx 10{,}619\,psi$ ✓

Bracket

$F_B = 300\,lb$ $A_B = (0.25\,in) \cdot (0.5\,in) = 0.125\,in^2$

$\sigma_B = \frac{F_B}{A_B} = \frac{300\,lb}{0.125\,in^2} = 2400\,psi$

$SF_{Leg} = \frac{\sigma_{A36}}{\sigma} = \frac{36{,}000\,psi}{2400\,psi} \approx 15$ ✓

Leg

$F_{Leg} \approx 300\,lb$

$A_{Leg} = (2.5\,in)(2.328427\,in) = 5.821\,in^2$

$\sigma_{Leg} = \frac{F_{Leg}}{A_{Leg}} = \frac{300\,lb}{5.821\,in^2} = 51.538\,psi$

$SF_{Leg} = \frac{\sigma_{AL}}{\sigma_{Leg}} = \frac{(\frac{3}{10})40{,}000\,psi}{51.538\,psi} \approx 232.4$ ✓

In worst case: All major components satisfy a Safety Factor of 3.

Don’t Forget The Bolt

US Bolts

Head Marking	Grade and Material	Nominal Size Range (inches)	Mechanical Properties		
			Proof Load (psi)	Min. Yield Strength (psi)	Min. Tensile Strength (psi)
3 Radial Lines	**Grade 5** Medium carbon steel, quenched and tempered	1/4" thru 1"	85,000	92,000	120,000
		Over 1" thru 1-1/2"	74,000	81,000	105,000

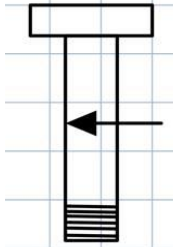

$V = 300\,lb$

$$A = \pi r^2 = \pi\left(\frac{0.5}{2}\right)^2 = 0.1963\,in^2$$

$$\sigma_B = \frac{F_B}{A_B} = \frac{300\,lb}{0.1963\,in^2} = 1592\,PSi$$

$$SF_{Leg} = \frac{\sigma_{G5}}{\sigma} = \frac{\left(\frac{6}{10}\right)92{,}000\,PSi}{1592\,PSi} \approx 55{,}200 \checkmark$$

NET STOOL WEIGHT ESTIMATE

Materials:
- 6061-T6 aluminum, A36 steel

Densities:
- 6061-T6 aluminum density = 0.0975 in^3
- A36 steel density = 0.284 lb per in^3

Top platform:
Volume = 1058 in^3
Effective volume at 30 percent = 317.4 in^3
Weight = 30.95 lb

Legs (4 total):
Volume per leg = 56.19 in^3
Total solid volume = 224.77 in^3
Effective volume at 30 percent = 67.43 in^3
Weight per leg = 6.57 lb

Brackets (4 total):
Solid volume per bracket = 7.78 in^3
Total volume = 31.12 in^3
Weight = 8.84 lb

Total stool weight:
Top platform = 31.0 lb
Legs = 6.6 lb
Brackets = 8.8 lb

NET STOOL WEIGHT = ~46 LB

Target Audience?

Due weight, we would market this stool to <u>factories & warehouses</u>

The ~1 ft height and the 529 in^2 area makes this stool attractive to <u>factories & warehouses</u> since they require plenty of space, and have many high shelves.

Justifications

- A conservative safety factor of 5 was chosen.

- A tipping safety factor of 1.02 means you can't lean far from the edge

- While the bracket has an estimated safety factor of about 15, real-world effects such as off-center loading, user movement, and dynamic stepping justify a higher overall safety margin.

- Also, we find a thickness of 4.5 in to be very justified when considering storage and portability

Part Dimensions

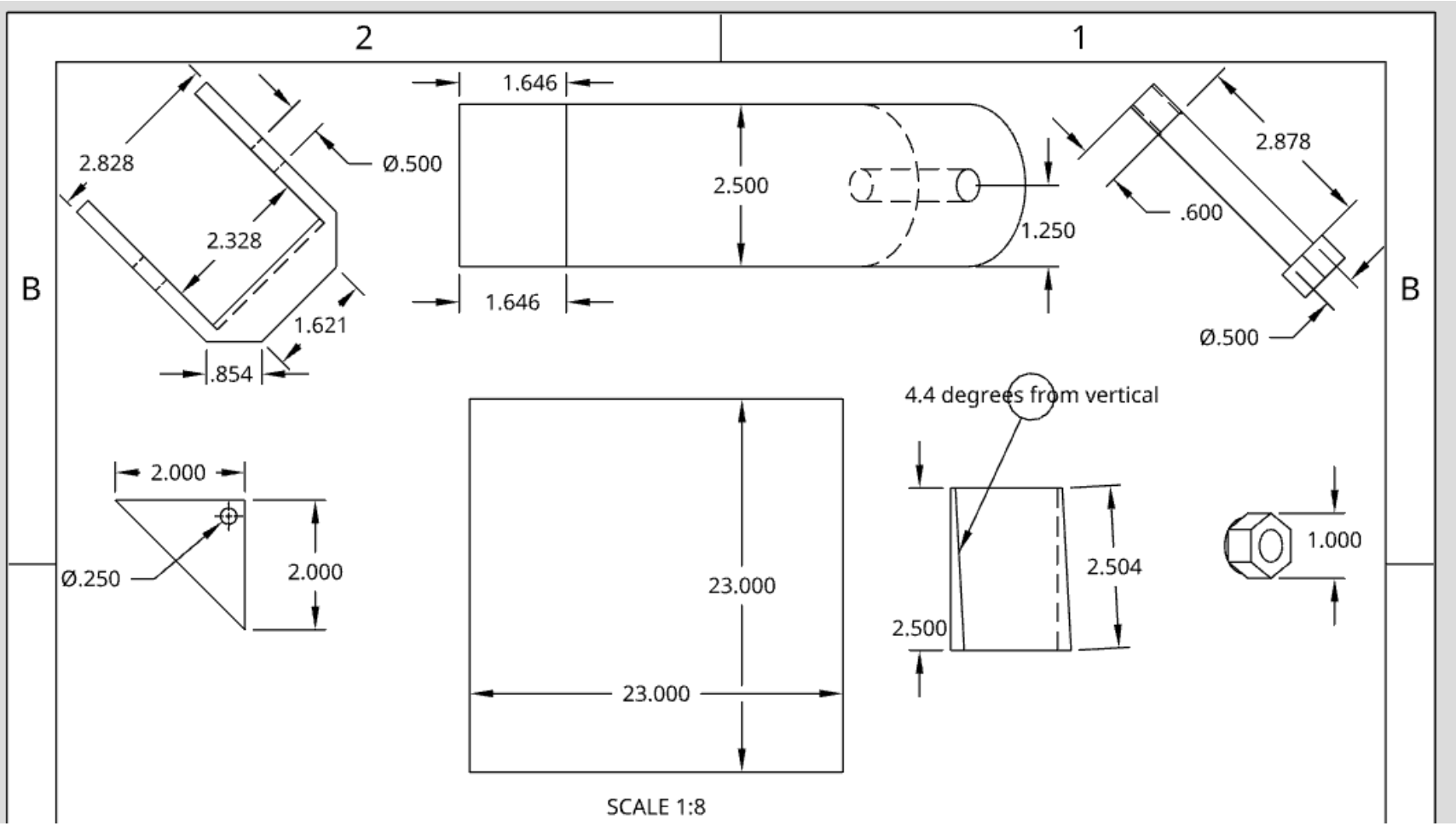

Resources Used:

- ASM Material Data Sheet

- ASTM A36 Mild/Low Carbon Steel

- Understanding Bolt Shear Strength: "How to Calculate Shear Strength
- Surprisingly, there are no shear strength values or requirements in ASTM specifications like there are for other strength measurements (e.g. tensile strength). Instead, the Industrial Fastener Institute articulates shear strength as about 60% of the minimum tensile strength."

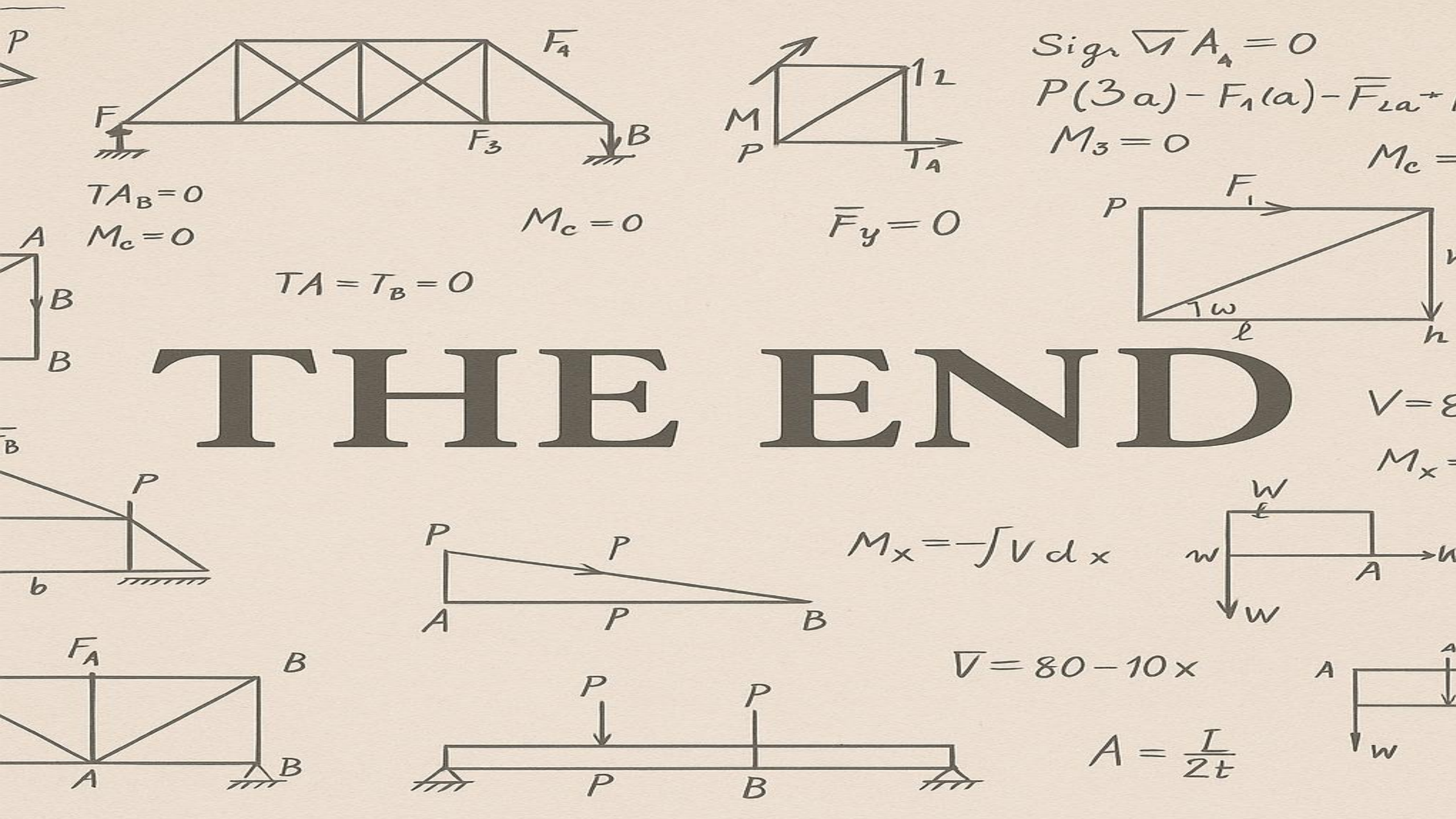
THE END
P
F
F4
F3
B
TA_B = 0
M_c = 0
M_c = 0
M
P
1
2
T_A
F_y = 0
Sig. M A_A = 0
P(3a) - F_1(a) - F_2a +
M_3 = 0
M_c =
F_1
P
w
l
h
A
B
B
TA = T_B = 0
P
b
P
P
A
P
B
M_x = -∫V dx
W
l
w
A
w
W
F_A
B
A
B
V = 80 - 10x
P
P
P
B
A = I/2t
A
w
V =
M_x =